International Journal of Information Management Data Insights 5 (2025) 100350

Contents lists available at ScienceDirect

International Journal of Information Management Data Insights

journal homepage: www.elsevier.com/locate/jjimei

Multi-variate LSTM with attention mechanism for the Indian stock market

Ashy Sebastian *, Dr. Veerta Tantia

School of Commerce, Finance and Accountancy, Department of Commerce, Christ University, India

ARTICLE INFO

Keywords:
Artificial intelligence
Big data analytics
Emerging markets
Multi-variate LSTM
Attention mechanism
Indian stock market

ABSTRACT

The advent of attention mechanism has surpassed numerous benchmarks and enabled widespread progress in the realm of natural language processing (NLP). Nevertheless, they have not been adequately leveraged in a time-series context. Accordingly, this paper aims to address this issue by proposing a hybrid, deep-learning model that integrates attention mechanisms and multi-variate long short-term memory (LSTM) for financial forecasting in the Indian stock market. Our model yields superior results as compared to baseline and state-of-the-art models evaluated using MAE and RMSE. Moreover, we employed a modern evaluation criterion based on the methodology advocated by Diebold–Mariano, known as the Diebold–Mariano test (DM test), as a new criterion for evaluation based on statistical hypothesis tests. DM test has been applied in this study to distinguish the significant differences in forecasting accuracy between LSTM with attention and other models. From the results and according to DM-test it is observed that the differences between the forecasting performances of models are significant and that attention mechanism could enhance the accuracy in predicting stock prices by allowing the model to prioritize and concentrate on the most important features and patterns in the data while avoiding overfitting and noise.

1. Introduction

The global economy is greatly impacted by stock markets, as shown by the crashes in 2008 and 2020, and predicting market movements is crucial for maximizing financial returns and security. Even small differences in predicting market movements can result in significant returns compared to the conventional 'buy and hold' approach. Traditional methods, such as statistical models, were previously used for market prediction. However, these methods often struggled to capture the complex and non-linear relationships in stock market data, leading to less accurate predictions. The development of artificial intelligence, specifically neural networks, has allowed for faster and more profitable trading using machine-based systems (Agarwal, 2021). Consequently, the concept of big data analytics has emerged as the most appropriate and efficient analytical method. It refers to techniques used to analyze and acquire intelligence from big data (Gandomi & Haider, 2015) and includes machine learning, deep learning, and natural language processing (NLP).

Long short-term memory (LSTM) is a variant of the RNN model that expands on the traditional model's capabilities and has the ability to address the problem of vanishing gradients, which is a common challenge in traditional RNNs. Over the past few years, they have emerged as state-of-the-art models for a wide range of machine learning tasks, varying greatly in size and characteristics (Valova et al., 2023) and is a widely accepted and applied technique for time-series prediction (Swathi et al., 2022). Usually, historical financial data is employed to train an LSTM model for stock market forecasting. Once the model has been trained, it can be used for future price forecasts, which can aid investors and traders in making informed choices regarding the right time to purchase or sell stocks. Q. Li et al. (2021) developed an LSTM and combined it with online news for predicting CSI 100 stocks. Y. L. Lin et al. (2022) employed an LSTM with genetic algorithm (GA) to predict the stock market indices and prices of five non-native English-speaking countries. The proposed model gave more accurate forecasts as compared to other machine learning models. LSTM is regarded as one of the most powerful and effective models for predicting stock prices (Nabipour et al., 2020)

The concept of attention has emerged as a crucial component in deep learning, drawing inspiration from how humans selectively focus on salient information while processing large volumes of data. As deep neural networks have evolved, attention mechanisms have been increasingly employed in diverse fields of application (Niu et al., 2021). For instance, Xu et al. (2016) successfully developed a model using attention mechanism to tackle image captioning tasks. Similarly, in

* Corresponding author.
E-mail addresses: ashyseban95@gmail.com (A. Sebastian), veerta.tantia@christuniversity.in (Dr.V. Tantia).

https://doi.org/10.1016/j.jjimei.2025.100350

Available online 21 June 2025
2667-0968/© 2026 The Authors. Published by Elsevier Ltd. This is an open access article under the CC BY license (http://creativecommons.org/licenses/by/4.0/).

machine translation, attention is a technique that aids the model in concentrating on the most crucial parts of the input sequence during its processing. This has led to significant improvements in translation quality, as reported in studies such as Bahdanau et al. (2015). Sheu & Li (2022) developed a money laundering detection tool by devising a graph attention network with a self-attention mechanism. This system enhanced the accuracy of identifying money laundering activities, promptly alerts about suspicious accounts or connections, and efficiently processes financial transaction records regardless of their volume. Recently, Kong et al. (2023) used an attention mechanism for multidimensional industrial time-series anomaly detection. Similarly, attention mechanisms have been used in sentiment analysis and text classification to identify the most informative words or phrases in the input text that contribute to the final classification decision.

Though attention architecture has broken many benchmarks and enabled widespread progress in NLP, however, at this point, neither researchers nor companies in the industry (with a few exceptions) have leveraged them in a time-series context. Forecasting in emerging markets is more difficult than in developed ones due to their greater volatility, which can be affected by external reasons such as oil prices and the performance of developed markets (M. Johnson, 2019). Emerging markets, such as China and India, comprise a significant portion of the global economy. However, trading in these markets requires a different approach than in developed markets, as they possess unique characteristics such as higher volatility and potentially greater average returns. Therefore, the development of appropriate predictive models can assist investors in emerging markets to maximize profits and minimize risk. Recent investigations successfully employed attention mechanisms in developed markets such as Hong Kong (J. Li et al., 2023; C. Zhao et al., 2024) and the USA (S. Li & Xu, 2024). Although the Indian stock market has made significant advancements, there is a dearth of research on the use of attention mechanisms for time-series prediction. Considering this, this research seeks to address the issue by exploring how to integrate deep learning with attention mechanisms for the emerging market of India.

The purpose of this paper is to develop a multi-variate LSTM model with an attention mechanism to predict future values of the NIFTY (National Stock Exchange Fifty) index. "Nifty 50 includes 50 of all companies listed and/ or traded on the NSE, captures approximately 55.48% of its float-adjusted market capitalization, and is a true reflection of the Indian stock market" -NIFTY Indices – Methodology Document, March 2025. We argue that attention mechanisms can improve the prediction accuracy of time-series data. We considered 13 years of NIFTY data to test our methodology and compared the model's performance with baseline models and state-of-the-art models. The Diebold–Mariano test (DM test) performed on the mean absolute error (MAE) and root mean squared error (RMSE) values of these models showed statistically significant differences to establish the superior performance of the proposed model. Our work is also novel in that it is one of the first to use a multi-variate LSTM with an attention mechanism for financial forecasting of the NIFTY index.

The significance of our work lies in its potential to improve financial decision-making and risk-management strategies through big data analytics. Financial markets generate vast amounts of data, and big data analytics involves leveraging advanced techniques to analyze and predict patterns, trends, or other outcomes based on this huge, complex data (Al-Sulaiman, 2022; Michaela Denise Gonzales & Hargreaves, 2022). Big data analytics through deep learning prediction models offers distinct advantages by providing decision support mechanisms for financial analysts, traders, and investors. The resultant improvement in the precision of stock price predictions contributes to the refinement of investment strategies and facilitates more effective risk management practices. They underscore organizational adaptability to dynamic economic conditions and serve as a strategic imperative for maintaining competitiveness within financial markets. The implications of this development extend to the realms of both academic research and practical applications in the financial sector.

The major contributions of our work are summarized as follows.

- Firstly, we develop a new LSTM with an attention layer for predicting the Indian stock market index NIFTY, where we provide a relatively detailed description of the model, including its working mechanism and general architecture.
- Secondly, we investigate and improve the predictive power of LSTM using an attention layer for regression problems. While scholars have employed deep learning in the financial domain, most have focused on classification tasks. Only a few studies have explored its application in predicting specific values within financial time series data. To address this gap, we suggest leveraging LSTM networks for forecasting actual closing prices.
- Lastly, we back-test the model using rolling window analysis and compare results with both baseline and competitive state-of-the-art alternative methods. From the DM test conducted on the error values across various test periods, we deduce that the proposed model shows statistically significant improvement in predictive performance in comparison to other models.

The order of the remaining sections of this paper is as described below:

Section 2 presents the previous studies in this area. Section 3 explains the methodology; Section 4 presents the analysis and results; Section 5 discusses the implications and limitations of our study; and in 6, we mark our concluding thoughts.

2. Literature review

Deep learning falls within the realm of machine learning and employs artificial neural networks (ANN) to address various problem-solving tasks. They have been used for financial forecasting, including economic recession predictions (Z. Wang et al., 2022), portfolio optimization (Rather, 2021; Z. Zhang et al., 2020) sentiment analysis (Jin et al., 2020; Ploessl et al., 2021) and much more. Numerous studies have explored the application of deep learning models, such as LSTM, CNN, RNN, and their variants, for financial time series prediction.

Cavalcante et al. (2016) conducted a survey of computational intelligence publications between 2009 and 2015, noting the widespread usage of ANNs and identifying deep learning as a potential area for future exploration. Inthachot et al. (2016) developed an ANN with GA and obtained 63.60% average prediction accuracy. Lee & Soo (2018) introduced a recurrent convolutional neural networks (RCN) model and integrated it with technical indicators to forecast stock prices. The results suggested that the proposed approach surpassed the outcomes achieved through technical analysis alone. Moews & Ibikunle (2020) investigated the predictability of intraday movements using different time intervals. They examined how their model performed and handled complexity during high-volatility crises. The study's findings demonstrated the existence of "time-delayed correlations" in S&P 500 stocks, both in steady and fluctuating market conditions. Additionally, the study provided evidence supporting the effectiveness of deep learning techniques in predicting trends within a vast number of inter-correlated time series. A comparison between nine machine learning and two deep learning models (RNN and LSTM) was conducted by Mehta et al. (2021) using ten stock technical indicators data over ten years. The study concluded that the deep learning models performed better. Ansari & Binninger (2022) confirmed the superior prediction accuracy of deep learning techniques for price prediction compared to conventional methods. Mukherjee et al. (2023) compared an ANN with CNN to predict the NIFTY index. They used MSE and MAE to evaluate the models' performance, and the results concluded that CNN performed better even during extreme market fluctuations, such as in the case of the COVID-19 pandemic. The findings of these studies have revealed promising results, indicating that deep learning techniques can understand and obtain

relevant attributes and patterns from trading data.

Recent studies that merged textual data with stock market data have also produced remarkable outcomes. Mehta et al. (2021) employed an MNB classifier, SVM, Naïve Bayes, linear regression, and LSTM to predict BSE and Infosys stock prices. The study utilized the general public's sentiment, viewpoints, news, and past stock prices. Y. L. Lin et al. (2022) used an LSTM along with GA on three sets of data: Dataset A consisted of sentiment scores obtained from Twitter and PTT posts, Dataset B comprised trading data and technical indicators, while Dataset C was a combination of Dataset A and B. Experimental results showed prediction using Dataset C which used hybrid data gave more accurate results as against Datasets A and B. Additionally, the proposed model exhibited better accuracy as compared to existing models. More recently, C. H. Chen et al. (2023) combined Chinese financial news and technical indicators to forecast stock movement in the Taiwan stock exchange. Ashtiani and Raahemi (2023) conducted a systematic review of literature focusing on news-driven forecasts in the stock market domain. Their findings suggested an increasing inclination towards leveraging news headlines for stock market prediction. Additionally, there's been a rising preference for ANNs, notably RNNs and deep learning architectures, during the period spanning from 2018 to 2021.

Several hybrid models have also been suggested and effectively put into practice. Shah et al. (2022) developed a model for predicting the NIFTY closing values by combining a CNN, LSTM, and dense layers within a 20-day time-frame. A proposal was made to use a framework that combines LSTM and a hybrid of CNN-LSTM for Tesla, Inc. and Apple, Inc by Aldhyani & Alzahrani (2022). The experimental outcomes indicated that during the training (LSTM: $R^2 = 97.20\%$, CNN-LSTM: $R^2 = 99.58\%$;) and testing (LSTM: $R^2 = 93.03\%$, CNN-LSTM: $R^2 = 98.37\%$;) phases, the CNN-LSTM method outperformed LSTM in terms of accuracy. Yadav et al. (2022) successfully combined FastRNNs, CNN, and Bi-Directional LSTM to predict the values of Apple, Facebook, Nike, and Uber. A Residual-CNN- Seq2Seq called RCSNet, was developed by Y. Zhao & Chen (2022) for stock trend prediction, which combined the ARIMA model, CNN, and the Seq2Seq LSTM. The experimental findings reveal that the RCSNet model surpasses the baseline models when tested on the S&P 500 index stock dataset.

Despite the existence of numerous deep learning techniques, considerable efforts have been dedicated to demonstrating that LSTM can outperform other methods in the prediction of time-series data. A. W. Li & Bastos (2020) conducted a systematic review that examined the use of deep learning models in predicting stock market trends through technical analysis. The findings indicated that the LSTM model was the most frequently utilized and ideal algorithm for stock market prediction because of its ability to store and solve the gradient vanishing problem. Nabipour et al. (2020) employed several machine learning and deep learning models to predict the Tehran stock exchange with both historical and technical indicators data. The study demonstrated that the LSTM model exhibited superior performance in terms of prediction accuracy, with the lowest error and highest capability to fit the data. Abbasimehr et al. (2020) proposed a multi-layer LSTM network with a grid search to find the model's ideal hyperparameters. The study used actual demand data from a furniture company to test the model and compared it to other time series forecasting methods. Results concluded that the proposed model outperformed the alternatives significantly and can be applied to real-world scenarios, like stock price prediction, weather forecasting, and energy demand forecasting. Furthermore, LSTMs have emerged as leading models for a diverse range of machine learning tasks, varying greatly in scale and characteristics. The core concept underlying LSTM architecture is the presence of a memory cell capable of retaining its state over time, complemented by non-linear gating units that control the flow of information into and out of the cell (Valova et al., 2023). Consequently, the existing literature inspires us to adopt LSTM for our study because of its ability to analyze relationships among time-series data through its memory function.

The attention mechanism was first introduced in 2014 and has since become a broadly used technique in NLP and deep learning. H. Li et al. (2018) developed an attention-based multi-input LSTM for the Chinese stock market. Experimental results proved that the suggested strategy outperformed state-of-the-art techniques. In their 2019 study, Liu & Guo (2019)introduced a novel approach to text classification called AC-BiLSTM, which combined Bidirectional LSTM (BiLSTM), attention mechanism, and a convolutional layer for text classification. The findings concluded that the proposed approach surpassed the existing methods with improved semantic understanding and classification accuracy. The success of this model is attributed to its ability to obtain, both local and global features of text data, as well as its capacity to focus on the most informative parts of the input through the attention mechanism. Y. Zhang et al. (2019) developed a Coordinated CNN-LSTM-Attention (CCLA) for sentiment analysis and text classification on movie review data. The experimental results showed that CCLA outperformed several state-of-the-art baseline models in terms of performance. Q. Chen et al. (2020) proposed an integration of attention mechanism, MLP, and BiLSTM neural network to forecast stock prices. Their model was tested on four major stock indexes, which include Dow Jones, S&P 500, NASDAQ, Russell 2000. The study confirmed the proposed approach's superiority and the attention mechanism's effectiveness for stock price prediction. M. Wang et al. (2020) applied a CNN-BiLSTM Network with an attention model to anticipate the operational lifespan of machine components. Qiu et al. (2020) performed experiments on S&P 500, DJIA, and HIS datasets using an LSTM with an attention mechanism. The findings show that the attention-based LSTM model obtained an R^2 greater than 0.94 and MSE less than 0.05 for both S&P 500 and DJIA datasets. Subsequently, Niu et al. (2021) discussed the massive success of attention mechanisms in various fields of deep learning applications such as image caption generation, speech recognition, action recognition, text classification, etc.

More recently, a GAN based on bi-directional LSTM and attention mechanism for industrial time-series anomaly detection was developed by Kong et al. (2023). The experimental findings demonstrated the superior performance of the proposed model as compared to other algorithms. Valova et al. (2023) built a novel deep learning topology based on Attention CNN_BiLSTM with a look-back period of 20 days. The attention-based CNN was the encoder, and the bidirectional LSTM was the decoder. The results showed that the suggested model reduced the MSE values by almost 50 % as compared to other models. Gao et al. (2023) developed a multi-variable LSTM network with variable attention layers for stock market prediction. The results demonstrated the efficiency of the proposed model to predict multi-variable financial sequences effectively. J. Li et al. (2023) employed attention mechanism and computational optimization algorithm (AOA) in an empirical study on the Shanghai Composite Index. The findings indicated that the AOA-Attention-LSTM algorithm demonstrated notable effectiveness in delivering accurate and efficient forecasts of stock price trends. A structured multi-head attention stock index prediction method based adaptive public opinion sentiment vector was proposed by C. Zhao et al. (2024). The model showed a MAPE of 0.463%, which is a reduction of 0.294% compared to the benchmark attention algorithm.

2.1. Research gap

Previous research has focused mainly on the application of attention mechanisms in machine translation, sentiment analysis, and text and image classification. However, despite a thorough search for relevant studies, there is inadequate research on the use of attention mechanisms in stock market prediction. This gap in the literature represents the novelty of this study, which will serve as a foundation for future research.

Furthermore, Aggarwal & Jha (2023) noted that the Indian stock market demonstrates a lack of efficiency, thus allowing traders to engage in predictive activities regarding future price movements and potentially realize abnormal profits. However, despite significant

progress in the Indian stock market, there has been insufficient research on the integration of attention mechanisms with deep learning to predict stock prices and trends. Our paper aims to fill this gap by proposing the use of an attention mechanism with deep learning for improved prediction performance of the Indian stock market index NIFTY. Among the various commonly used deep learning models, we choose LSTM for our purpose because of its ability to analyze relationships among time-series data through its memory function.

Hence, we propose an LSTM with an attention layer for the Indian stock market. This study is the first of its kind, and consequently, it is believed that this paper is making a substantial contribution to the related literature.

3. Methodology

3.1. Data description and pre-processing

To illustrate the proposed model, we collected historical values of NIFTY for 13 years from the official NSE website[1]. The values included four features- Open, High, Low, and Close (OHLC). The total dataset consisting of daily trading data of 3,679 trading days (January 2010 – December 2023), does not have any duplicates and NAN values. Table 1 presents the statistical summary of the dataset.

The skewness and kurtosis values indicate that all the time series exhibit significant right skewness and platykurtosis. The results of the Jarque-Bera test (Jarque & Bera, 1980) further support this, as the null hypothesis of normality is rejected at the 5% significance level for all the time series, confirming their deviation from a normal distribution. Furthermore, the outcomes of the Augmented Dickey-Fuller (Dickey & Fuller, 1979) stationarity test (ADF) shows that at the 1% confidence level, the p-values for all the series are greater than the threshold, leading to the failure to reject the null hypothesis of a unit root. Consequently, all the time series are deemed non-stationary, indicating the presence of trends or random walks in the data. Given this non-stationary nature of the time series, transformations are necessary before proceeding with time series modelling. These transformations are crucial for improving the accuracy and reliability of any subsequent modelling or forecasting

3.1.1. Logarithmic transformation and standardization

Log transformation compresses larger values and expands smaller values, reducing the skewness in the distribution and making the data closer to a normal distribution. It helps to manage volatility by converting the exponential growth of prices into a more stable, linear trend. By focusing on relative changes rather than absolute ones, the model can better capture the underlying dynamics of financial markets, leading to more accurate predictions.

Standardization is another critical step in preprocessing financial data, particularly when dealing with features that have different magnitudes or units. Standardization helps to rescale the data so that each feature has a mean of zero and a standard deviation of one. This transformation ensures that all features are on the same scale, making them comparable and preventing any one feature from dominating the others during model training (Fang et al., 2023; Y. Lin et al., 2021). This technique is especially beneficial for algorithms such as LSTMs, that rely on gradient descent, as it helps the optimizer converge more efficiently. After applying the log transformation, the data is standardized using the below equation.

$$\text{Standardized value} = \frac{x-\mu}{\sigma} \tag{1}$$

Where x is the original value of the data, μ is the mean of the data and σ is the standard deviation of the data

Table 1
Statistical summary of the dataset.

Statistic	Open	High	Low	Close
Mean	10980.79	11034.13	10910.05	10973.25
Std Dev	5444.38	5463.56	5417.40	5441.56
Skewness	0.91	0.91	0.91	0.91
Kurtosis	-0.17	-0.17	-0.16	-0.17
Jarque-Bera p-value	0.00	0.00	0.00	0.00
ADF p-value	0.99	0.99	0.99	0.99
Stationary	False	False	False	False

Source: Author

3.2. Rolling window analysis

Out-of-sample tests are widely regarded as the "gold standard" for evaluating forecasts (Sahiner, 2022). According to conventional wisdom, forecast performance should be assessed using out-of-sample data rather than the same dataset used to estimate the model's parameters, known as "in-sample" forecasts. Prior research establishes that in-sample forecasting is less reliable than out-of-sample tests (White, 2000) and even the most accurate in-sample forecasts may fail to predict post-sample data effectively (Bartolomei & Sweet, 1989; Pant & Starbuck, 1990)

For estimating out-of-sample forecasts, the study has used the rolling window method. The dataset is divided into a total of nine windows, each window consisting of a distinct training period of five years and a test period of one year, with the training set progressively expanding while the test period moves forward in time. The first window (Window 1) includes a training period from 01/01/2010 to 31/12/2014 and tests the model on data from 01/01/2015 to 31/12/2015. For each subsequent window, the training period expands by one year, starting from 01/01/2011 to 31/12/2015 for Window 2 and continuing similarly for the following windows. The corresponding test periods remain fixed at one year in length, with the model being evaluated on data immediately following the training period. This approach ensures the model's ability to generalize over extended time periods while emphasizing the notion that recent stock prices hold greater predictive value compared to older ones. By utilizing nine distinct windows, this method provides a comprehensive assessment of model performance across different temporal periods, accounting for potential changes in market conditions over time. Details of the train and test windows are shown in Fig. 1.

3.3. Proposed model

3.3.1. LSTM

Hochreiter & Schmidhuber (1997) introduced LSTM in 1997 to address the issue of vanishing gradients in conventional RNNs, which hindered their ability to effectively capture long-term relationships in sequential data. This problem occurs because gradients tend to become smaller and smaller as they propagate back through time, making it difficult for the network to update the weights in earlier layers. Fig. 2 shows the schematic representation of an LSTM. The main advantage of LSTMs over traditional RNNs is their capability to choose whether to remember or forget information from earlier time steps, enabling them to handle long-term dependencies more effectively. This is achieved through a set of specialized memory cells and gating mechanisms that balance information flow through the network. It uses three gates—Forget Gate f_t , Input Gate i_t , and Output Gate O_t to regulate the flow of information. Figs. 3–6 visualizes them in detail.

a) Forget gate

The forget gate determines which parts of the previous cell state C_{t-1}

[1] https://www.nseindia.com/reports-indices-historical-index-data

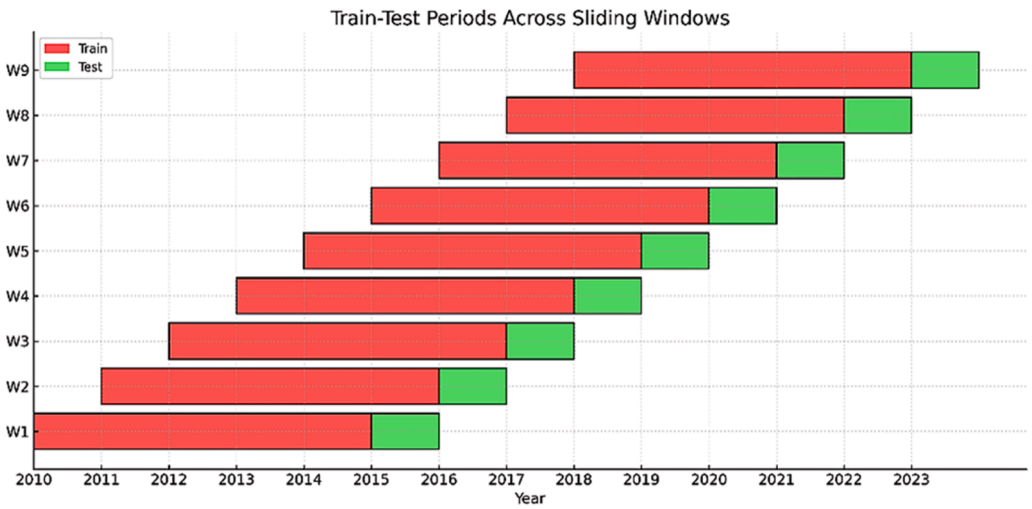

Fig. 1. Gantt chart showing train-test window.
Source: Authors

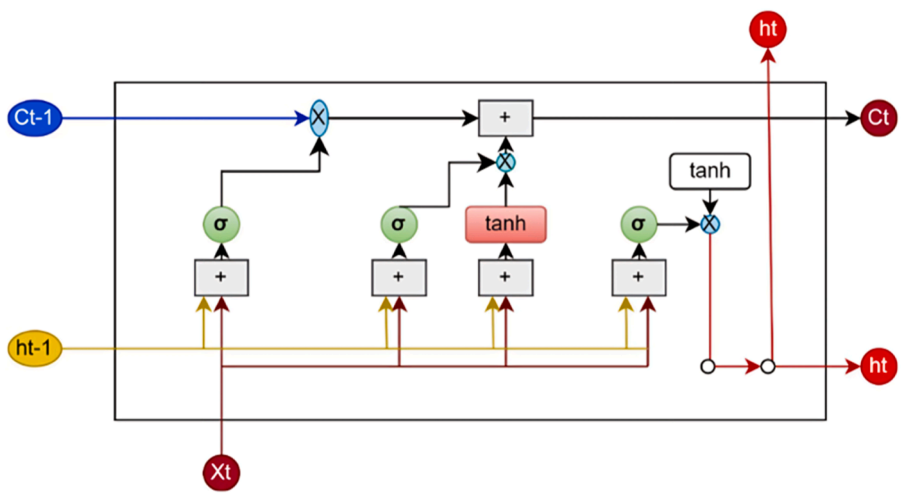

Fig. 2. Overview of the LSTM model.
Source: Boddu & Manimaran (2024)

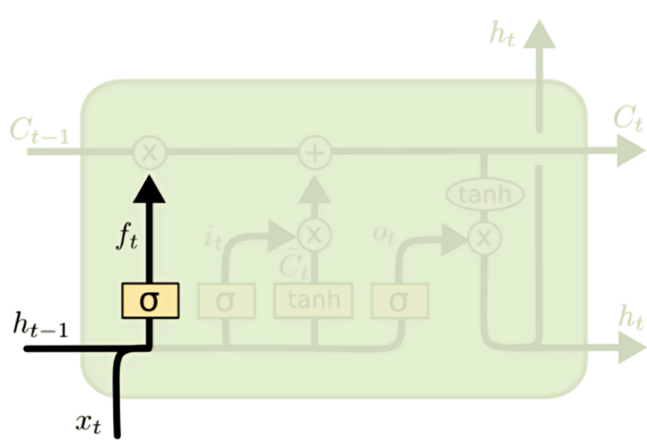

Fig. 3. Forget gate.
Source: (Akpolat, 2021)

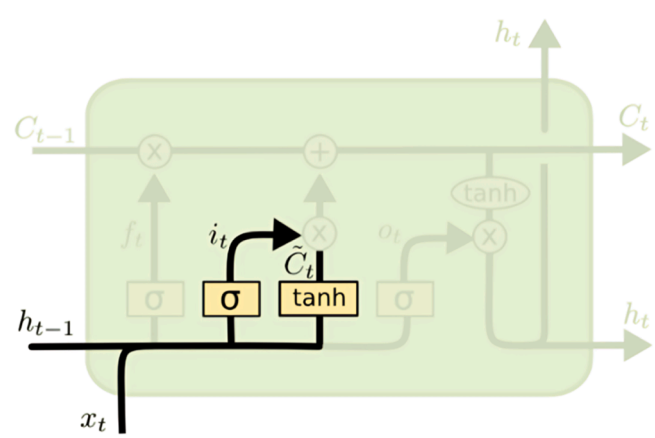

Fig. 4. Input gate.
Source: (Akpolat, 2021)

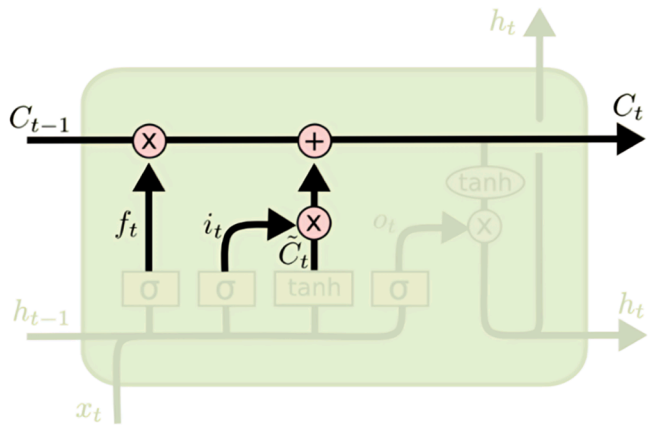

Fig. 5. Cell State.
Source: (Akpolat, 2021)

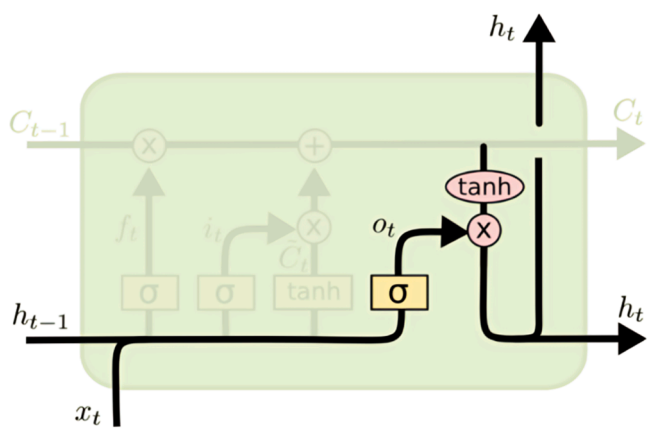

Fig. 6. Output Gate.
Source: (Akpolat, 2021)

to retain or discard.

$$f_t = \sigma\left(W_f \cdot [h_{t-1}, x_t] + b_f\right) \tag{2}$$

Where W_f: is the weight matrix for the forget gate, h_{t-1}, x_t is the concatenation of the previous hidden state h_{t-1} and current input x_t, b_f is the bias vector for the forget gate, σ is the sigmoid activation function, which outputs values between 0 and 1.

The output f_t is a vector of values (0–1) indicating the importance of each part of the previous cell state.

If $f_t[i] \approx 1$, retain the information.

If $f_t[i] \approx 0$, forget the information.

b) Input gate

The input gate decides which new information to store in the cell state.

$$i_t = \sigma(W_i \cdot [h_{t-1}, x_t] + b_i) \tag{3}$$

$$C_t = tanh\,(W_C \cdot [h_{t-1}, x_t] + b_c) \tag{4}$$

Where i_t is the input gate vector, which determines how much of the new information to keep, W_i is the weight matrix for the input gate, C_t is the candidate cell state containing new information generated by tanh, W_C is the weight matrix for the candidate cell state.

If $i_t[i] \approx 1$: The corresponding value in C_t will strongly influence the cell state. If $i_t[i] \approx 0$: The corresponding value in C_t is ignored.

c) Update cell state

The cell state C_t is updated by combining the retained previous cell state $f_t \cdot C_{t-1}$ and the new information $i_t \cdot C_t$. The cell state C_t serves as the memory of the LSTM, capturing long-term dependencies.

$$C_t = f_t \cdot C_{t-1} + i_t \cdot C_t \tag{5}$$

$f_t \cdot C_{t-1}$: Retains important parts of the previous cell state.
$i_t \cdot C_t$:Adds relevant new information to the cell state.

d) Output gate

The output gate determines the output h_t based on the updated cell state C_t

$$O_t = \sigma(W_O \cdot [h_{t-1}, x_t] + b_O) \tag{6}$$

$$h_t = O_t \cdot \tan(C) \tag{7}$$

where O_t is the output gate vector, which decides which parts of $tan(C_t)$ to pass to the output and h_t is the hidden state, which is also the output of the LSTM at this time step.

The tanh function squashes the cell state C_t values to a range of −1 to 1 and O_t determines the importance of each value.

This architecture enables the LSTM to effectively capture both short-term and long-term dependencies in sequential data.

LSTM possess the capability to automatically analyze time series data, leverage feature learning to uncover relevant characteristics durations and retain acquired knowledge over prolonged durations (Obthong et al., 2020). This method allows the model to adapt and detect complex patterns within the data without relying on manual feature engineering. Their ability to manage intricate temporal dependencies makes them a preferred choice in fields where precise predictions based on historical data are essential (Boddu & Manimaran, 2024). Though deeper LSTM architecture is known to yield superior prediction outcomes compared to a single LSTM network (S. Chen & Ge, 2019), we use a single LSTM to evaluate whether integrating an attention layer into the baseline model can improve the predictive power of the model.

3.3.2. Attention mechanism

The Attention Mechanism is a neural network technique that allows a model to concentrate on specific segments of the input sequence while making predictions. In traditional sequence-to-sequence models, the entire input sequence is encoded into a fixed-length vector, which is then used to generate the output sequence. This can be problematic for long input sequences or those with important information in specific locations, as the fixed-length vector may not capture all the relevant information. The attention mechanism addresses this issue by allowing the model to emphasize dynamically specific segments of the input sequence, giving more weight to the most relevant parts for the current prediction. This mechanism comes from the fact that numerous animals concentrate on specific segments of their visual field to generate appropriate responses (S. Chen & Ge, 2019). This is done by computing a set of attention weights, determining how much each input element contributes to the final output. There are many variations of the attention mechanism, but one common approach is to use a neural network to compute a score for each input element based on its compatibility with the current state of the decoder. These scores are then normalized to obtain attention weights, which are used to compute a weighted sum of the input elements, giving more weight to the elements with higher attention scores.

By adding a self-attention layer to a sequential model that includes other layers, such as dense layers, we can leverage the power of attention to improve the performance of the model on tasks such as image classification or other tasks where the model needs to selectively focus

on the most salient parts of the input features. The larger the number of units in the attention layer, the more expressive the attention mechanism can be, but also, the more prone it may be to overfitting the training data.

Studies such as (Gao et al., 2023) reported that when the input includes multiple variables, a conventional LSTM doesn't differentiate the impact of each variable and fails to fully utilize the information it transmits. Consequently, we propose a hybrid method by integrating an LSTM with self- attention mechanism, which computes attention weights over the input features across all time steps. As a result, different input sequences can be given varying weights, thereby increasing the forecasting accuracy.

3.3.3. Working of the model

The proposed model's design is shown in Fig. 7, which is explained as follows;

The input data for the LSTM model is arranged in a three-dimensional array, with distinct dimensions representing different aspects of the data. The time dimension corresponds to the sliding time window, capturing temporal relationships across time steps t. The sample dimension denotes the size of the dataset used for training and testing, while the feature dimension represents the number of input features provided to the LSTM model. We chose 30 days as the time window (K. Chen et al., 2015; Jin et al., 2020; Sebastian & Tantia, 2024), and the input features are the OHLC values. The outputs are the close values of the 31st day. The input layer is linked to the LSTM layer with 50 neurons, which is the hidden layer. The LSTM layer processes the input sequence and outputs a sequence of 50 features for each of the 30-time steps. This LSTM is connected to the attention layer which receives outputs from the LSTM layer or the hidden states, denoted as h_t where t represents the time step. For each time step t, the attention mechanism computes a score, referred to as an attention score $e_{t,k}$ which quantifies the relevance of the LSTM hidden state h_t,with respect to other hidden states h_k in the sequence.

$$e_{t,k} = h_t W_a x_k + b_a \tag{8}$$

Where W_a and b_a are learnable parameters and $e_{t,k}$ is the unnormalized relevance score.

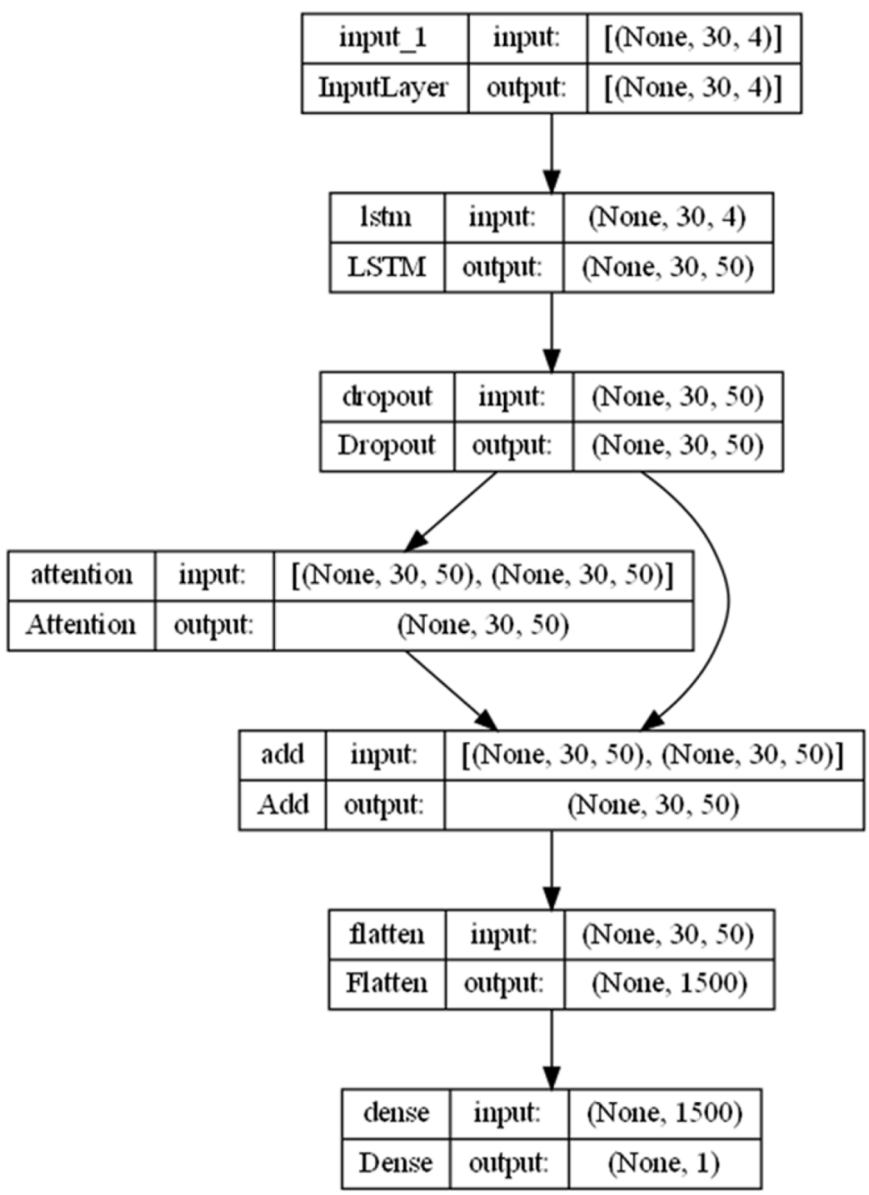

Fig. 7. Architecture of the proposed model.
Source: Authors

The scores $e_{t,k}$ are then normalized using a softmax function to produce attention weights that sum to 1, effectively creating a probability distribution over the time steps.

$$\alpha_{t,k} = \frac{\exp(e_{t,k})}{\sum_{j=1}^{T} exp(e_t, k)} \tag{9}$$

$\alpha_{t,k}$ indicates the importance of x_k relative to h_t

These attention weights are used to compute a context vector C_t, which is a weighted sum of the input features X. This context vector C_t is a summary of the input sequence, which focuses more on those parts of the sequence with higher attention weights.

$$C_t = \sum_{k=1}^{T} \alpha_{t,k} \cdot x_k \tag{10}$$

The context vector C_t is concatenated with the hidden state h_t to produce an enhanced representation:

$$z_t = [h_t; C_t] \tag{11}$$

z_t is a combined vector that incorporates both the LSTM's sequential information (h_t) and the attention-weighted input features (C_t). The combined vector z_t is passed through a dense or fully connected layer to make the final prediction. By influencing the LSTM outputs with these attention-weighted context vectors, the model can focus on relevant parts of the sequence using $\alpha_{t,k}$. It can combine temporal dependencies (captured by h_t) and global sequence information (summarized by C_t).

Dropout and early stopping techniques are employed for regularization. Dropout involves randomly deactivating a subset of neurons within a layer during each training iteration, thereby reducing the risk of overfitting (Srivastava et al., 2014). In this study, a dropout rate of 0.2 has been implemented (Ansari & Binninger, 2022; Sebastian & Tantia, 2024). Early stopping, on the other hand, is a Keras callback mechanism that halts the training process when a monitored metric, such as validation loss or accuracy, ceases to improve. Here, it mitigates overfitting by terminating training after the model's performance on the validation dataset shows no improvement for five consecutive epochs.

The model is initiated using random weights and biases. Tanh and Linear activation functions are utilized in the hidden and output layers, respectively. We use MSE as the loss function.

$$\text{MSE} = \frac{1}{n} \sum_{i=1}^{n} |yi - \hat{y}i|^2 \tag{12}$$

The LSTM network generates its own loss, and the total loss is obtained by summing the losses from LSTM networks, the attention layer, and the dense layer. Our model utilizes the Adam optimization algorithm during training to optimize this total loss. The number of epochs is set to 100, as followed by Z. Zhang et al. (2020). An epoch represents one complete pass of the entire training dataset by the LSTM model (Nabipour et al., 2020). The model's parameter settings are determined through trial-and-error experiments. A Python 3.7 environment and the deep learning toolkit Keras- which is a high-level API developed for Google's TensorFlow framework, are used to implement the model. Table 2 shows the parameter settings.

Table 2
Parameter settings.

Parameters	Values
Optimizer	Adam
Epochs	100
Batch size	64
Step size	30
Drop out	0.2
Activation function	Tanh (Hidden layer) Linear (Output layer)

Source: Author

3.4. Statistical test indicators

3.4.1. Metric evaluation

Appropriate assessment metrics are required to validate the proposed deep learning model. In this study, we used MAE and RMSE for evaluation purposes. They have been extensively used in the literature (Ansari & Binninger, 2022; Ding & Qin, 2020a; Sebastian & Tantia, 2024; Shakri, 2022). MAE indicates the average error when making predictions with the model. The RMSE represents the square root of the mean of the squared difference between the predicted values and actual values. Lower MAE and RMSE values would increase the prediction accuracy. The equations of these two metrics are as follows.

$$\text{MAE} = \frac{1}{n} \sum_{i=1}^{n} |yi - \hat{y}i| \tag{13}$$

$$\text{RMSE} = \sqrt{\frac{1}{n} \sum_{i=1}^{n} |yi - \hat{y}i|^2} \tag{14}$$

Where n is the number of data points, y_i is the actual value of the ith data point, $\hat{y}_i$ is the predicted value of the ith data point, Σ represents summation,| | represents absolute value.

3.4.2. The Diebold-Mariano test

The Diebold-Mariano (DM) test is a statistical method introduced by Diebold & Mariano (2002) to compare the forecast accuracy of two competing models by evaluating whether one model significantly outperforms the other. The test examines the predictive accuracy by analyzing the forecast errors, calculated as the difference between predicted and observed values, and comparing the forecast errors of the two models. We calculate the Diebold-Mariano test statistic and its significance level (p-value) for RMSE and MAE in order to assess if the LSTM with attention performs significantly better than the other models. If the p-value is less than the chosen significance level (α), the null hypothesis is rejected, suggesting that the predictive performance of the models differs significantly. The DM test is widely employed in the empirical finance literature (Boddu & Manimaran, 2024; Sahiner, 2022; Y. Zhang et al., 2024).

Null Hypothesis (H_o): The two models have no difference in forecast accuracy.

Alternative Hypothesis (H_1): LSTM with attention significantly outperforms the other in terms of forecast accuracy.

The Diebold-Mariano test statistic is as follows in equation 15.

$$DM = \frac{\bar{d}}{\sigma_d^2 / T} \tag{15}$$

Where $\bar{d}$ the mean of the loss differential, σ_d^2 is the variance of the loss differential and T is the number of observations.

4. Results

In this section, the experiment's results are presented and analyzed. 3,679 records in days are included in the study. OHLC values of the last 30 days were used to forecast the close value of the following day. Specifically, we chose LSTM as our baseline model and conducted two experiments. Fig. 8 illustrates the average price of the NIFTY index during a span of 13 years.

It was observed that the index suffered major downfalls in 2016 due to the demonetisation move by the Indian government, in 2020 after the breakout of the COVID pandemic, and in 2022 due to Russia-Ukraine tensions and inflation concerns.

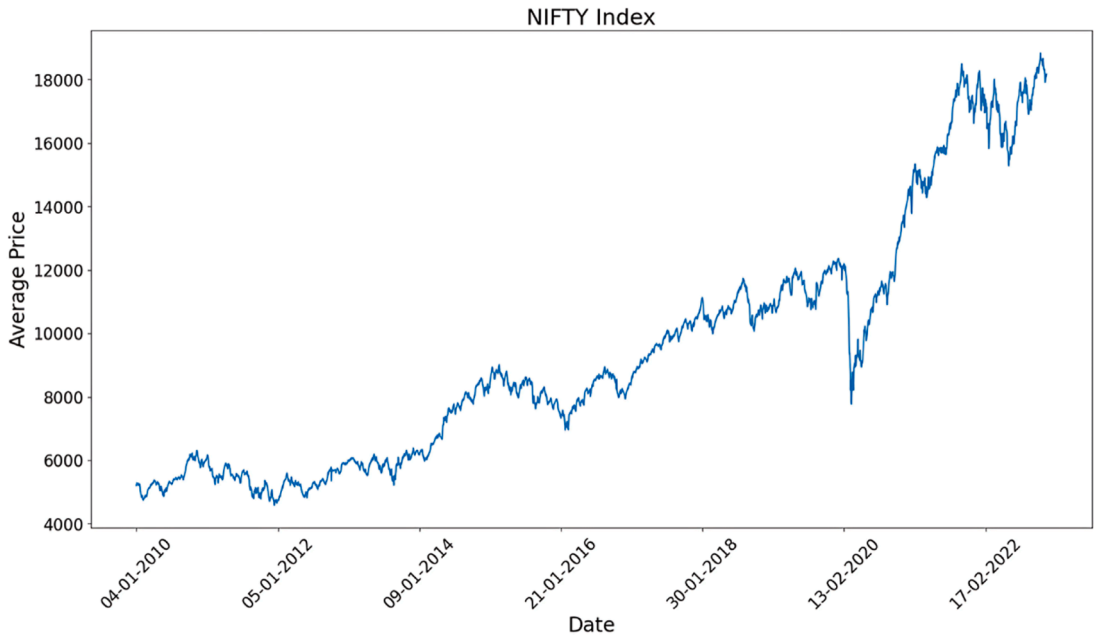

Fig. 8. Average price of NIFTY over the last 13 years.
Source: Authors

4.1. LSTM with attention mechanism

For the first experiment, we developed a multi-variate LSTM with an attention layer, as shown in Fig. 7. In order to assess the model's robustness across different test periods, the dataset is divided into a total of 9 windows using an expanding rolling window, starting from January 2020 till December 2023. Fig. 9 exhibits the model's performance over various test periods.

The performance of the LSTM model with attention mechanism, as evaluated using RMSE and MAE across nine test periods, demonstrates its ability to capture complex market patterns effectively. The RMSE values range from 0.0378 in 2019 to 0.0768 in 2020, while the MAE values range from 0.0299 in 2019 to 0.0614 in 2021. These metrics indicate that the model achieves relatively low prediction errors overall, with the smallest errors observed during stable market conditions, as reflected in 2019 and 2022, with RMSE values of 0.0378 and 0.0443, and MAE values of 0.0299 and 0.0355, respectively. Conversely, slightly higher errors in 2015 and 2021, with RMSE values of 0.0724 and 0.0722 and MAE values of 0.0572 and 0.0614, suggest that increased market fluctuations during these periods may have influenced the model's predictive accuracy. Despite these fluctuations, the model maintains consistent error levels across periods, as reflected in its average RMSE of 0.0602 and average MAE of 0.0475, underscoring its robustness in capturing patterns across diverse market conditions.

4.2. Comparison with other models

The second experiment involved developing a vanilla (base model) and stacked LSTM and comparing them with the proposed model. Furthermore, we also compared our model with GRU and the state-of-the-art transformer model based on attention. Tables 3,4,5 and 6 present an overview of the other models. The hyperparameters, such as loss function activation functions, optimizer, batch size, and epochs, have been configured to match those of the proposed model.

The results of the rolling window period are summarized in Table 7, and Table 8 reports the average error metrics, which reveal significant differences in the predictive performance across models.

The vanilla LSTM model demonstrates robust performance, with an average MAE of 0.0732 and RMSE of 0.0802, underscoring its efficacy in capturing temporal dependencies within stock market data. As a baseline model, the vanilla LSTM combines architectural simplicity with reliable predictive accuracy, serving as a benchmark for comparative analysis. The stacked LSTM model, incorporating multiple LSTM layers, achieves an average MAE of 0.0559 and RMSE of 0.0666, indicating a marginal improvement over the vanilla LSTM. This finding suggests that deeper architectures may enhance forecasting accuracy, though careful optimization is required to mitigate the risk of diminishing returns. The LSTM with attention demonstrates superior performance, achieving the lowest average MAE of 0.0475 and RMSE of 0.0602 among the evaluated models. This result underscores the efficacy of the attention mechanism in selectively focusing on relevant temporal features, thereby addressing long-term dependencies and significantly improving predictive accuracy. In contrast, the GRU model records an average MAE of 0.1173 and RMSE of 0.1245, reflecting suboptimal performance. While GRU is recognized for its computational efficiency and reduced complexity, its predictive capabilities in this context appear insufficient for modelling the intricate temporal patterns inherent in stock market data. The transformer model exhibits the highest error metrics, with an average MAE of 0.2711 and RMSE of 0.2931. Despite its proven success in NLP tasks, these results indicate that the application of the transformer to stock market data necessitates significant architectural customization or the integration of domain-specific features to enhance its efficacy for time-series forecasting.

Accordingly, the performance of the models in price forecasting is LSTM with Attention > Stacked LSTM > Vanilla LSTM > GRU > Transformer. These findings highlight the critical importance of advanced mechanisms, such as attention, in enhancing the predictive accuracy of recurrent architectures for financial forecasting tasks.

4.3. Pre, during and Post COVID performance comparison

The analysis of model performance across the three distinct regimes—Pre-COVID, COVID, and Post-COVID—was conducted to assess the impact of the COVID pandemic on predictive accuracy and model adaptability. The models' ability to adapt to sudden changes in data trends and make accurate predictions during and after the pandemic is critical for understanding their robustness and suitability for future forecasting tasks.

Fig. 9. Test period performance of the proposed model.
Source: Authors

Table 3
Summary of the Vanilla LSTM model.

Model: 'Sequential'		
Layer (type)	Output Shape	Param #
lstm (LSTM)	(None, 50)	11000
dropout (Dropout)	(None, 50)	0
dense (Dense)	(None, 1)	51
Total params: 11,051		
Trainable params: 11,051		
Non-trainable params: 0		

Source: Author

Table 4
Summary of the Stacked LSTM model.

Model: 'Sequential'		
Layer (type)	Output Shape	Param#
lstm_1 (LSTM)	(None, 30, 50)	11000
dropout_1 (Dropout)	(None, 30, 50)	0
lstm_2 (LSTM)	(None, 30, 50)	20200
dropout_2 (Dropout)	(None, 30, 50)	0
lstm_3 (LSTM)	(None, 50)	20200
dense_1 (Dense)	(None, 1)	51
Total params: 51,451		
Trainable params: 51,451		
Non-trainable params: 0		

Source: Author

The pre-COVID period represents the stable phase before the onset of the global pandemic. It includes data from 2018 to 2019, a time when the world economy, social structures, and data patterns were operating in a stable, predictable manner. This period provides a baseline for model performance under normal, non-disrupted conditions. The COVID period spans from January 2020 to December 2021, covering the initial outbreak and subsequent global impact of the COVID pandemic. The sudden and unprecedented nature of the pandemic introduced significant volatility in most datasets, making it a particularly challenging

Table 5
Summary of the GRU model.

Layer (type)	Output Shape	Param #
gru (GRU)	(None. 50)	8400
dense (Dense)	(None. 1)	51
dropout (Dropout)	(None. 1)	0
Total params: 8,451		
Trainable params: 8,451		
Non-trainable params: 0		

Source: Author

Table 6
Summary of the Transformer model.

Model: "Model_1"		
Layer (type)	Output Shape	Param #
input (InputLayer)	(None, 30, 4)	0
multi_head_attention	(None, 30, 4)	2436
dropout (Dropout)	(None, 30, 4)	0
add_1 (Add)	(None, 30, 4)	0
layer_normalization	(None, 30, 4)	8
dense (Dense)	(None, 30, 4)	260
dropout (Dropout)	(None, 30, 4)	0
add_2 (Add)	(None, 30, 4)	0
layer_normalization_1	(None, 30, 4)	8
flatten (Flatten)	(None, 120)	0
dense (Dense)	(None, 1)	121
Total params: 3,153		
Trainable params: 3,153		
Non-trainable params: 0		

Source: Author

period for forecasting models. The post-COVID period refers to the years following the peak of the COVID pandemic, specifically 2022 and 2023. This period includes the adaptation phase, where the world slowly returned to a "new normal," but the lingering effects of the pandemic continued to influence various domains, including data patterns and behaviours. The post-COVID period provides insights into how well models adapt to the residual effects of the pandemic after its peak.

In Fig. 10, we illustrate the performance results of all the models examined in the context of our experiments, thus illustrating a comparison between the models implemented and examined. During the pre-COVID period, the LSTM with attention demonstrated superior performance, with a MAE of 0.039 and a RMSE of 0.05155, significantly outperforming the transformer model, which exhibited a considerably higher MAE of 0.2463 and RMSE of 0.2713. In the COVID period, LSTM with AM remained the most robust model, maintaining relatively low MAE (0.05625) and RMSE (0.0745), while other models, such as the GRU (MAE = 0.1616, RMSE = 0.17295) and transformer (MAE = 0.4567, RMSE = 0.5013), experienced substantial performance degradation. The post-COVID period saw a continued strong performance from LSTM with AM with MAE of 0.03985 and RMSE of 0.05045, while other models showed varying degrees of recovery.

4.4. Hypothesis testing

Table 9 presents the results of the DM test. The DM statistic quantifies the relative accuracy of the two models, while the associated p-value determines the statistical significance of these differences. Model 2 is superior to Model 1 when the DM statistics are greater than 0; otherwise, Model 1 is superior to Model B. A p-value below 0.05 indicates a significant divergence, leading to the rejection of the null hypothesis, which posits a significant difference in forecast accuracy between the compared models.

The results reveal that the LSTM with AM model outperforms the vanilla LSTM and transformer models, with DM statistics of −2.6313 and (p-value of 0.0301) and −2.3567 (p-value of 0.0462 for MAE, and −3.3812 (p-value =0.0096) and −2.4853 (p value=0.0378) for RMSE, respectively. The negative DM statistics in these cases indicate that the AM model exhibits superior forecast accuracy compared to these baseline models. However, the DM test values for comparisons with stacked LSTM and GRU models did not yield p-values below the 0.05 threshold, suggesting no statistically significant difference in performance. The magnitude of the DM statistics further highlights the AM model's strong predictive performance, particularly in comparison to simpler architectures like the vanilla LSTM and more complex structures such as the transformer.

Experimental results evidence that attention mechanism has the capability to identify the key elements in the input sequence and allocate greater emphasis to them, enabling the model to enhance its focus on those components. Subsequently, the model can allocate more attention to this area, extracting more detailed information about the target while optimizing the use of limited attention resources. This positions the LSTM with attention as a robust and effective model in the context of stock market forecasting.

4.5. Ablation study

4.5.1. Effect of the attention layer

As shown in Table 3, the vanilla LSTM model was introduced following the same hyperparameters as that of the LSTM with attention. With the addition of a self-attention layer connection sequentially to the

Table 8
Evaluation results of all models.

Model	Average MAE	Average RMSE
Vanilla	0.0732	0.0802
Stacked LSTM	0.0559	0.0666
AM	0.0475	0.0602
GRU	0.1173	0.1245
Transformer	0. 2711	0.2931

Source: Author

Table 7
Results of the rolling window period.

Test Period	AM		Vanilla		Stacked LSTM		GRU		Transformer	
	MAE	RMSE	MAE	RMSE	MAE	RMSE	MAE	RMSE	MAE	RMSE
1	0.0572	0.0724	0.0272	0.0746	0.0489	0.0631	0.0242	0.0308	0.1215	0.1438
2	0.0465	0.0563	0.061	0.0619	0.0366	0.044	0.033	0.044	0.0605	0.0736
3	0.054	0.0597	0.081	0.0766	0.0886	0.096	0.0408	0.0479	0.1096	0.1162
4	0.0481	0.0653	0.1154	0.1058	0.0507	0.0594	0.0315	0.0369	0.2463	0.2713
5	0.0299	0.0378	0.0553	0.0589	0.0321	0.0385	0.0539	0.0604	0.132	0.1518
6	0.0511	0.0768	0.1065	0.1211	0.0438	0.0592	0.0787	0.0964	0.1614	0.2341
7	0.0614	0.0722	0.0596	0.0639	0.1165	0.126	0.2445	0.2495	0.752	0.7685
8	0.0355	0.0443	0.0694	0.0702	0.0389	0.0505	0.2486	0.2511	0.0705	0.0832
9	0.0442	0.0566	0.0835	0.0888	0.0472	0.063	0.3007	0.3036	0.7856	0.7953

Source: Author

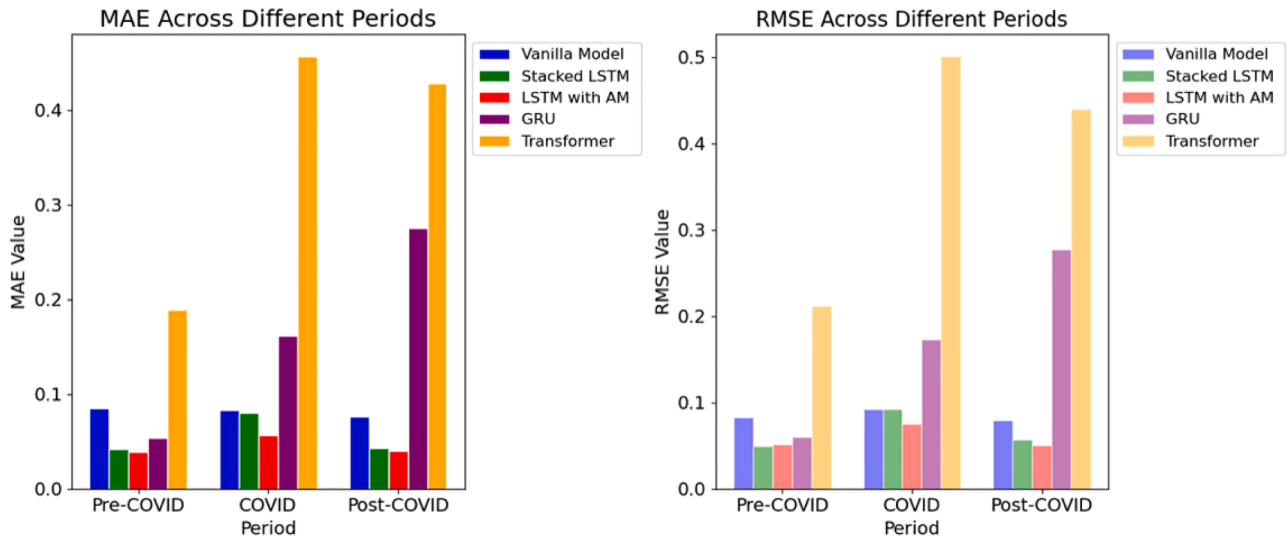

Fig. 10. Performance comparison of the models across COVID regimes.
Source: Authors

Table 9
DM test results.

Model 1	Model 2	DM Stat (MAE)	p-value (MAE)	DM Stat (RMSE)	p-value (RMSE)
AM	Vanilla	-2.6312	0.0301	-3.3812	0.0096
AM	Stacked LSTM	-1.1451	0.2852	-0.8196	0.4361
AM	GRU	-1.8362	0.1036	-1.7126	0.1251
AM	Transformer	-2.3567	0.0461	-2.4852	0.0377
Vanilla	Stacked LSTM	1.3082	0.2271	1.1243	0.2934
Vanilla	GRU	-1.1486	0.2838	-1.1655	0.2773
Vanilla	Transformer	-2.0728	0.0719	-2.2524	0.0543
Stacked LSTM	GRU	-1.6844	0.1305	-1.6465	0.1382
Stacked LSTM	Transformer	-2.3527	0.0464	-2.5128	0.0362
GRU	Transformer	-2.1001	0.0689	-2.3079	0.0498

Source: Author

LSTM, a considerable reduction in both MAE and RMSE was observed. Following the method by Ding & Qin (2020) for calculating accuracy, the proposed model outperformed with an accuracy of 95.25% against the vanilla LSTM with 92.68%, which is an improvement of 2.57% predictive accuracy. Particularly at times of high volatility, such as during COVID, the prediction errors are reduced by 2.68% (MAE) and 1.8% (RMSE). As such, empirically, we observe that by incorporating an attention layer, improved results can be obtained in baseline architecture. Further, the DM test confirmed the statistically significant predictive superiority of the proposed model as compared to the vanilla model.

4.5.2. Model application on SENSEX

The primary purpose of this paper is to develop an attention-based prediction model for India's emerging economy. The model initially trained and tested on NIFTY data was also tested on BSE SENSEX data to explore the model's robustness, adaptability, and performance across different datasets within the Indian market. Table 10 exhibits a summary of the results.

The results indicate that the LSTM with attention consistently outperformed other benchmark models and achieved an average MAE of 4.88 % and RMSE of 5.96 %, highlighting its capacity to model temporal dependencies effectively while focusing on critical patterns using the attention mechanism. These findings underscore the versatility and efficiency of the proposed model in generalizing to unseen datasets while maintaining low prediction errors.

Table 10
Performance results on SENSEX data.

Model	Average MAE	Average RMSE
Vanilla Model	0.0531	0.0691
Stacked LSTM	0.0576	0.0709
LSTM with AM	0.0488	0.0596
GRU	0.1235	0.1305
Transformer	0.2585	0.2878

Source: Author

5. Discussion

In this study, we attempted to predict the close values of the NIFTY index using a multi-variate LSTM with attention mechanism. In this section, we discuss the implications for theory and practice. In addition, we explore the limitations and future research directions.

5.1. Implications to theory

As noted in Section 1, the main novelty of our work is that while existing studies performed price predictions by using deep learning and attention mechanisms, they did not explore predictability in emerging markets. Forecasting in emerging markets is more difficult than in developed ones due to their greater volatility (M. Johnson, 2019). Despite significant progress in the Indian stock market, there has been insufficient research on the integration of attention mechanisms with deep learning to predict stock prices and trends. As such, in our study, to address this, we develop an attention-based LSTM for improved prediction performance of the Indian stock market index NIFTY. We add to the existing literature (Singh & Srivastava, 2017; Shen & Shafiq, 2020; Fan et al., 2021; Y. Lin et al., 2021; Yadav et al., 2022) that attempts to predict the stock market using deep learning techniques.

Furthermore, we investigate and improve the predictive power of LSTM using an attention layer. Limited efforts have been directed to investigate how to leverage LSTM to extract valuable insights from noisy financial time-series data efficiently. Consequently, this paper endeavours to fill this gap by making a substantive contribution to this area of research. In particular, we integrate LSTM with attention mechanism

and propose a stock market prediction model, which can focus more on more critical information. We compared our model with other baseline and state-of-the-art models and performed a DM test to test the statistical significance of the performance comparison between them. We deduce that using an attention layer in the LSTM improved its performance by a fair percentage.

Additionally, though researchers have used LSTM for stock market predictions, most studies focused on classification problems rather than regression (Jin et al., 2020). Theoretically, this paper advances the current literature (Bhandari et al., 2022; Nabipour et al., 2020) by exploring the application of LSTM in regression tasks within the realm of stock market forecasting, aiming to deepen further our understanding of its predictive capabilities in this domain.

Lastly, the outcomes of our investigation align with recent research (Kardakis., 2021; Wang., 2021), which confirms the precision of attention mechanisms over traditional approaches. Our results are consistent with the results of studies (Qiu et al., 2020; J. Li et al., 2023; Huang et al., 2024; Oyewola et al., 2024) that employed attention-based models to predict stock prices. Our model exhibited superior predictive accuracy and lower error metrics as compared to prior literature (S. Chen & Ge, 2019; Sun et al., 2024; Q. Zhang et al., 2022; Zhu et al., 2024) .This research enriches and fills a gap in the literature by analyzing the importance of incorporating attention mechanisms in LSTM for prediction purposes.

5.2. Implications to practice

The implications of this research for practice are manifold. Firstly, by providing a framework for enhancing the accuracy of neural networks specifically LSTM, this study facilitates the conversion of knowledge into actionable market intelligence. The developed model holds promise for application in algorithmic trading systems, augmenting existing state-of-the-art techniques. Secondly, the results highlight the importance of employing an attention mechanism with LSTM for stock price prediction, emphasizing the potential for enhancing forecasting accuracy and refining investment strategies in financial markets.

Furthermore, the demonstrated ability of the proposed model to capture significant information overlooked by other models and enhance forecasting accuracy underscores its potential as a decision-support tool for financial analysts, traders, and investors. By improving the precision of stock price predictions, this model contributes to the refinement of investment strategies and facilitates more effective risk management practices in financial markets.

5.3. Limitations and future research

There are some limitations in the current paper that can be considered in forthcoming studies. Despite its improved performance, our model used only historical values of NIFTY as input prices, which may not be sufficient to capture all the relevant information for accurate forecasting. Future studies could explore the integration of other sources of data, such as news articles, social media sentiment analysis and technical indicators, to improve the model's predictive power. Including exogenous factors, such as interest rates, inflation rates, and exchange rates, could also provide more comprehensive forecasting results. Another limitation of this study is the focus on accuracy metrics like MAE and RMSE, which do not account for practical trading considerations such as trading costs, tax implications, or market impact. Future work could address this by incorporating metrics like net profit, sharpe ratio, and portfolio turnover to evaluate the model's real-world applicability and profitability. Furthermore, the impact of incorporating different attention mechanisms, such as multi-head attention, could also be explored in future studies. These potential avenues for future work could enhance the proposed LSTM model's accuracy and provide a more comprehensive understanding of its effectiveness in stock market forecasting.

6. Conclusion

The concept of attention has emerged as a crucial component in deep learning and has been increasingly employed in diverse fields of application, such as sentiment analysis, text classification, image captioning, etc. However, they have not been leveraged for stock market predictions, especially in emerging markets. Hence, this paper endeavours to fill this gap by integrating deep learning with attention mechanisms for the Indian stock market. The key novelty of our work is that it is one of the first to develop a multi-variate LSTM with an attention layer for financial forecasting of the NIFTY index.

Our findings demonstrate that integrating attention mechanism with deep learning enhanced the predictive power of LSTM by allowing the model to focus on the most relevant features and patterns. This reduces the impact of noise and improves forecast precision. Results show the superiority of our model over other approaches, suggesting that attention mechanisms hold substantial promise for improving stock price predictions, especially in emerging markets. Additionally, the practical implications of this research are significant, offering financial analysts and traders a more accurate tool for decision-making in volatile and complex market conditions.

Furthermore, it also emphasizes the broader potential of big data analytics. The integration of large-scale data processing and advanced deep learning techniques enables the model to handle the intricacies of financial data more effectively, paving the way for more sophisticated and accurate predictive models in the future. This approach underscores the importance of continuing to develop and refine models that can navigate the complexities of financial markets, ultimately offering more reliable insights for stakeholders.

Funding

This research did not receive any specific grant from funding agencies in the public, commercial, or not-for-profit sectors.

CRediT authorship contribution statement

Ashy Sebastian: Writing – original draft, Visualization, Validation, Software, Methodology, Investigation, Formal analysis, Data curation, Conceptualization. **Dr. Veerta Tantia:** Writing – review & editing, Supervision, Project administration.

Declaration of competing interest

The authors declare that they have no known competing financial interests or personal relationships that could have appeared to influence the work reported in this paper.

Acknowledgments

None

References

Abbasimehr, H., Shabani, M., & Yousefi, M. (2020). An optimized model using LSTM network for demand forecasting. *Computers and Industrial Engineering, 143*(March), Article 106435. https://doi.org/10.1016/j.cie.2020.106435

Agarwal, A. (2021). Study of machine learning algorithms for potential stock trading strategy frameworks. *International Journal of Financial, Accounting, and Management, 3*(3), 275–287. https://doi.org/10.35912/ijfam.v3i3.604

Aggarwal, K., & Jha, M. K. (2023). Day-of-the-week effect and volatility in stock returns: evidence from the Indian stock market. *Managerial Finance*. https://doi.org/10.1108/MF-01-2023-0010

Akpolat, O. (2021). *Deep learning and probabilistic approaches for financial time series analysis*. The Florida State University.

Aldhyani, T. H. H., & Alzahrani, A. (2022). Framework for predicting and modeling stock market prices based on deep learning algorithms. *Electronics (Switzerland), 11*(19). https://doi.org/10.3390/electronics11193149

Al-Sulaiman, T. (2022). Predicting reactions to anomalies in stock movements using a feed-forward deep learning network. *International Journal of Information Management Data Insights, 2*(1), Article 100071. https://doi.org/10.1016/j.jjimei.2022.100071

Ansari, O. B., & Binninger, F. M. (2022). A deep learning approach for estimation of price determinants. *International Journal of Information Management Data Insights, 2*(2), Article 100101. https://doi.org/10.1016/j.jjimei.2022.100101

Bahdanau, D., Cho, K. H., & Bengio, Y. (2015). Neural machine translation by jointly learning to align and translate. In *3rd International Conference on Learning Representations, ICLR 2015 - Conference Track Proceedings* (pp. 1–15).

Bartolomei, S. M., & Sweet, A. L. (1989). A note on a comparison of exponential smoothing methods for forecasting seasonal series. *International Journal of Forecasting, 5*(1), 111–116.

Bhandari, H. N., Rimal, B., Pokhrel, N. R., Rimal, R., Dahal, K. R., & Khatri, R. K. C. (2022). Predicting stock market index using LSTM. *Machine Learning with Applications, 9*(May), Article 100320. https://doi.org/10.1016/j.mlwa.2022.100320

Boddu, Y., & Manimaran, A. (2024). Maximizing forecasting precision: empowering multivariate time series prediction with QPCA-LSTM. *Computational Economics*. https://doi.org/10.1007/s10614-024-10813-z

Cavalcante, R. C., Brasileiro, R. C., Souza, V. L. F., Nobrega, J. P., & Oliveira, A. L. I. (2016). Computational intelligence and financial markets: A survey and future directions. *Expert Systems with Applications, 55*, 194–211. https://doi.org/10.1016/j.eswa.2016.02.006

Chen, C. H., Shih, P., Srivastava, G., Hung, S. T., & Lin, J. C. W. (2023). Evolutionary trading signal prediction model optimization based on Chinese news and technical indicators in the internet of things. *IEEE Internet of Things Journal, 10*(3), 2162–2173. https://doi.org/10.1109/JIOT.2021.3085714

Chen, K., Zhou, Y., & Dai, F. (2015). A LSTM-based method for stock returns prediction : A case study of China stock market. In *IEEE International Conference on Big Data (Big Data)* (pp. 2823–2824). http://arxiv.org/abs/1506.00019.

Chen, Q., Zhang, W., & Lou, Y. (2020). Forecasting stock prices using a hybrid deep learning model integrating attention mechanism, multi-layer perceptron, and bidirectional long-short term memory neural network. *IEEE Access, 8*, 117365–117376. https://doi.org/10.1109/ACCESS.2020.3004284

Chen, S., & Ge, L. (2019). Exploring the attention mechanism in LSTM-based Hong Kong stock price movement prediction. *Quantitative Finance, 19*(9), 1507–1515. https://doi.org/10.1080/14697688.2019.1622287

Dickey, D. A., & Fuller, W. A. (1979). Distribution of the estimators for autoregressive time series with a unit root. *Journal of the American Statistical Association, 74*(366), 427–431. https://doi.org/10.1080/01621459.1979.10482531

Diebold, F. X., & Mariano, R. S. (2002). Comparing predictive accuracy. *Journal of Business & Economic Statistics, 20*(1), 134–144. https://doi.org/10.1198/073500102753410444

Ding, G., & Qin, L. (2020). Study on the prediction of stock price based on the associated network model of LSTM. *International Journal of Machine Learning and Cybernetics, 11*(6), 1307–1317. https://doi.org/10.1007/s13042-019-01041-1

Fan, M. H., Chen, M. Y., & Liao, E. C. (2021). A deep learning approach for financial market prediction: utilization of Google trends and keywords. *Granular Computing, 6*(1), 207–216. https://doi.org/10.1007/s41066-019-00181-7

Fang, Z., Ma, X., Pan, H., Yang, G., & Arce, G. R. (2023). Movement forecasting of financial time series based on adaptive LSTM-BN network. *Expert Systems with Applications, 213*(October 2022). https://doi.org/10.1016/j.eswa.2022.119207

Gandomi, A., & Haider, M. (2015). Beyond the hype: big data concepts, methods, and analytics. *International Journal of Information Management, 35*(2), 137–144. https://doi.org/10.1016/j.ijinfomgt.2014.10.007

Gao, F., Zhang, J., Zhang, C., Xu, S., & Ma, C. (2023). Long short-term memory networks with multiple variables for stock market prediction. *Neural Processing Letters, 55*(4), 4211–4229. https://doi.org/10.1007/s11063-022-11037-8

Hochreiter, S., & Schmidhuber, J. (1997). Long short-term memory. *Neural Computation, 9*(8), 1735–1780.

Huang, Y., Wan, X., Zhang, L., & Lu, X. (2024). A novel deep reinforcement learning framework with BiLSTM-attention networks for algorithmic trading. *Expert Systems with Applications, 240*. https://doi.org/10.1016/j.eswa.2023.122581

Inthachot, M., Boonjing, V., & Intakosum, S. (2016). Artificial neural network and genetic algorithm hybrid intelligence for predicting Thai stock price index trend. *Computational Intelligence and Neuroscience, 2016*. https://doi.org/10.1155/2016/3045254

Jarque, C. M., & Bera, A. K. (1980). Efficient tests for normality, homoscedasticity and serial independence of regression residuals. *Economics Letters, 6*(3), 255–259. https://doi.org/10.1016/0165-1765(80)90024-5

Jin, Z., Yang, Y., & Liu, Y. (2020). Stock closing price prediction based on sentiment analysis and LSTM. *Neural Computing and Applications, 32*(13), 9713–9729. https://doi.org/10.1007/s00521-019-04504-2

Kardakis, S., Perikos, I., Grivokostopoulou, F., & Hatzilygeroudis, I. (2021). Examining attention mechanisms in deep learning models for sentiment analysis. *Applied Sciences (Switzerland), 11*(9). https://doi.org/10.3390/app11093883.

Kong, F., Li, J., Jiang, B., Wang, H., & Song, H. (2023). Integrated generative model for industrial anomaly detection via bidirectional LSTM and attention mechanism. *IEEE Transactions on Industrial Informatics, 19*(1), 541–550. https://doi.org/10.1109/TII.2021.3078192

Lee, C. Y., & Soo, V. W. (2018). Predict stock price with financial news based on recurrent convolutional neural networks. In *Proceedings - 2017 Conference on Technologies and Applications of Artificial Intelligence, TAAI 2017* (pp. 160–165). https://doi.org/10.1109/TAAI.2017.27

Li, A. W., & Bastos, G. S. (2020). Stock market forecasting using deep learning and technical analysis: A systematic review. *IEEE Access, 8*, 185232–185242. https://doi.org/10.1109/ACCESS.2020.3030226

Li, H., Shen, Y., & Zhu, Y. (2018). Stock price prediction using attention-based multi-input LSTM. In *, 95. Proceedings of Machine Learning Research*.

Li, J., Dong, J., & Liang, C. (2023). Stock trend prediction based on improved composite AOA-attention-LSTM algorithm. In *ACM International Conference Proceeding Series* (pp. 49–56). https://doi.org/10.1145/3613917.3613925

Li, Q., Tan, J., Wang, J., & Chen, H. (2021). A multimodal event-driven LSTM model for stock prediction using online news. *IEEE Transactions on Knowledge and Data Engineering, 33*(10), 3323–3337. https://doi.org/10.1109/TKDE.2020.2968894

Li, S., & Xu, S. (2024). Enhancing stock price prediction using GANs and transformer-based attention mechanisms. *Empirical Economics*. https://doi.org/10.1007/s00181-024-02644-6

Lin, Y. L., Lai, C. J., & Pai, P. F. (2022). Using deep learning techniques in forecasting stock markets by hybrid data with multilingual sentiment analysis. *Electronics (Switzerland), 11*(21). https://doi.org/10.3390/electronics11213513

Lin, Y., Liu, S., Yang, H., & Wu, H. (2021). Stock trend prediction using Candlestick charting and ensemble machine learning techniques with a novelty feature engineering scheme. *IEEE Access, 9*, 101433–101446. https://doi.org/10.1109/ACCESS.2021.3096825

Liu, G., & Guo, J. (2019). Bidirectional LSTM with attention mechanism and convolutional layer for text classification. *Neurocomputing, 337*, 325–338. https://doi.org/10.1016/j.neucom.2019.01.078

Johnson, M. (2019). Forecasting in emerging markets: challenges and solutions. *Journal of Emerging Market Finance, 18*(1), 1–14.

Mehta, P., Pandya, S., & Kotecha, K. (2021). Harvesting social media sentiment analysis to enhance stock market prediction using deep learning. *PeerJ Computer Science, 7*, 1–21. https://doi.org/10.7717/peerj-cs.476

Michaela Denise Gonzales, R., & Hargreaves, C. A. (2022). How can we use artificial intelligence for stock recommendation and risk management? A proposed decision support system. *International Journal of Information Management Data Insights, 2*(2), Article 100130. https://doi.org/10.1016/j.jjimei.2022.100130

Moews, B., & Ibikunle, G. (2020). Predictive intraday correlations in stable and volatile market environments: evidence from deep learning. *Physica A: Statistical Mechanics and Its Applications, 547*(xxxx), Article 124392. https://doi.org/10.1016/j.physa.2020.124392

market prediction using deep learning algorithms Mukherjee, S., Sadhukhan, B., Sarkar, N., Roy, D., & De, S. (2023). Stock market prediction using deep learning algorithms. *CAAI Transactions on Intelligence Technology, 8*(1), 82–94. https://doi.org/10.1049/cit2.12059.

Nabipour, M., Nayyeri, P., Jabani, H., Mosavi, A., Salwana, E., & Shahab, S. (2020). Deep learning for stock market prediction. *Entropy, 22*(8). https://doi.org/10.3390/E22080840

Niu, Z., Zhong, G., & Yu, H. (2021). A review on the attention mechanism of deep learning. *Neurocomputing, 452*, 48–62. https://doi.org/10.1016/j.neucom.2021.03.091

Obthong, M., Tantisantiwong, N., Jeamwatthanachai, W., & Wills, G. (2020). *A survey on machine learning for stock price prediction: algorithms and techniques*.

Oyewola, D. O., Akinwunmi, S. A., & Omotehinwa, T. O. (2024). Deep LSTM and LSTM-attention Q-learning based reinforcement learning in oil and gas sector prediction. *Knowledge-Based Systems, 284*, Article 111290. https://doi.org/10.1016/J.KNOSYS.2023.111290

Pant, P. N., & Starbuck, W. H. (1990). Innocents in the forest: forecasting and research methods. 16(2), 433–460. https://doi.org/10.1177/014920639001600209.

Ploessl, F., Just, T., & Wehrheim, L. (2021). Cyclicity of real estate-related trends: topic modelling and sentiment analysis on German real estate news. *Journal of European Real Estate Research, 14*(3), 381–400. https://doi.org/10.1108/JERER-12-2020-0059

Qiu, J., Wang, B., & Zhou, C. (2020). Forecasting stock prices with long-short term memory neural network based on attention mechanism. *PLoS ONE, 15*(1), 1–15. https://doi.org/10.1371/journal.pone.0227222

Rather, A. M. (2021). LSTM-based deep learning model for stock prediction and predictive optimization model. *EURO Journal on Decision Processes, 9*(May), Article 100001. https://doi.org/10.1016/j.ejdp.2021.100001

Sahiner, M. (2022). Forecasting volatility in Asian financial markets: evidence from recursive and rolling window methods. In *SN Business & Economics, 2*. Springer International Publishing. https://doi.org/10.1007/s43546-022-00329-9

Sebastian, A., & Tantia, V. (2024). Deep learning for stock price prediction and portfolio optimization. *International Journal of Advanced Computer Science and Applications, 15*(9). https://doi.org/10.14569/IJACSA.2024.01509951343

Shah, A., Gor, M., Sagar, M., & Shah, M. (2022). A stock market trading framework based on deep learning architectures. *Multimedia Tools and Applications, 81*(10), 14153–14171. https://doi.org/10.1007/s11042-022-12328-x

Shakri, I. H. (2022). Time series prediction using machine learning: a case of Bitcoin returns. *Studies in Economics and Finance, 39*(3), 458–470. https://doi.org/10.1108/SEF-06-2021-0217

Shen, J., & Shafiq, M. O. (2020). Short-term stock market price trend prediction using a comprehensive deep learning system. *Journal of Big Data, 7*(1). https://doi.org/10.1186/s40537-020-00333-6

Sheu, G. Y., & Li, C. Y. (2022). On the potential of a graph attention network in money laundering detection. *Journal of Money Laundering Control, 25*(3), 594–608. https://doi.org/10.1108/JMLC-07-2021-0076

Singh, R., & Srivastava, S. (2017). Stock prediction using deep learning. *Multimedia Tools and Applications, 76*(18), 18569–18584. https://doi.org/10.1007/s11042-016-4159-7

Srivastava, N., Hinton, G., Krizhevsky, A., Sutskever, I., & Salakhutdinov, R. (2014). Dropout: A simple way to prevent neural networks from overfitting. *Journal of Machine Learning Research, 15*, 1929–1958.

Sun, Y., Mutalib, S., Omar, N., & Tian, L. (2024). A novel integrated approach for stock prediction based on modal decomposition technology and machine learning. *IEEE Access, 12*(June), 95209–95222. https://doi.org/10.1109/ACCESS.2024.3425727

Swathi, T., Kasiviswanath, N., & Rao, A. A. (2022). An optimal deep learning-based LSTM for stock price prediction using twitter sentiment analysis. *Applied Intelligence*, 13675–13688. https://doi.org/10.1007/s10489-022-03175-2

Valova, I., Gueorguieva, N., Aayushi, T., Nikitha, P., & Mohamed, H. (2023). Hybrid deep learning architectures for stock market prediction. In *Proceedings of the World Congress on Electrical Engineering and Computer Systems and Science* (pp. 1–8). https://doi.org/10.11159/cist23.121

Wang, M., Cheng, J., & Zhai, H. (2020). Life prediction for machinery components based on CNN-BiLSTM network and attention model. In *Proceedings of 2020 IEEE 5th Information Technology and Mechatronics Engineering Conference, ITOEC 2020, Itoec* (pp. 851–855). https://doi.org/10.1109/ITOEC49072.2020.9141720

Wang, P. Y., Chen, C. T., Su, J. W., Wang, T. Y., & Huang, S. H. (2021). Deep learning model for house price prediction using heterogeneous data analysis along with joint self-attention mechanism. *IEEE Access, 9*, 55244–55259. https://doi.org/10.1109/ACCESS.2021.3071306.

Wang, Z., Li, K., Xia, S. Q., & Liu, H. (2022). Economic recession prediction using deep neural network. *Journal of Financial Data Science, 4*(3), 108–127. https://doi.org/10.3905/jfds.2022.1.097

White, H. (2000). A reality check for data snooping. *Econometrica, 68*(5), 1097–1126. https://doi.org/10.1111/1468-0262.00152

Xu, K., Kiros†, J. L. B. R., Courville, Kyunghyun, Cho, A., Zemel†*, R. S. R. S., & Bengio*, Y. (2016). Show, attend and tell: neural image caption generation with visual attention. *Science of the Total Environment, 572*, 169–176. https://doi.org/10.1016/j.scitotenv.2016.07.196

Yadav, K., Yadav, M., & Saini, S. (2022). Stock values predictions using deep learning based hybrid models. *CAAI Transactions on Intelligence Technology, 7*(1), 107–116. https://doi.org/10.1049/cit2.12052

Zhang, Q., Qin, C., Zhang, Y., Bao, F., Zhang, C., & Liu, P. (2022). Transformer-based attention network for stock movement prediction. *Expert Systems with Applications, 202*(April), Article 117239. https://doi.org/10.1016/j.eswa.2022.117239

Zhang, Y., Peng, Y., & Song, Y. (2024). Realized volatility forecasting for stocks and futures indices with rolling CEEMDAN and machine learning models. *Computational Economics*. Springer US. https://doi.org/10.1007/s10614-024-10732-z

Zhang, Y., Zheng, J., Jiang, Y., Huang, G., & Chen, R. (2019). A text sentiment classification modeling method based on coordinated CNN-LSTM-attention model. *Chinese Journal of Electronics, 28*(1), 120–126. https://doi.org/10.1049/cje.2018.11.004

Zhang, Z., Zohren, S., & Roberts, S. (2020). Deep learning for portfolio optimization. *Journal of Financial Data Science, 2*(4), 8–20. https://doi.org/10.3905/jfds.2020.1.042

Zhao, C., Peng, Z., Lan, X., Cen, Y., & Wang, Z. (2024). StructuredMulti-head attention stock index predictionmethod based adaptive public opinion sentiment vector. *Computers, Materials and Continua, 78*(1), 1503–1523. https://doi.org/10.32604/cmc.2024.039232

Zhao, Y., & Chen, Z. (2022). Forecasting stock price movement: new evidence from a novel hybrid deep learning model. *Journal of Asian Business and Economic Studies, 29*(2), 91–104. https://doi.org/10.1108/JABES-05-2021-0061

Zhu, W., Dai, W., Tang, C., Zhou, G., Liu, Z., & Zhao, Y. (2024). PMANet: a time series forecasting model for Chinese stock price prediction. *Scientific Reports, 14*(1), 1–17. https://doi.org/10.1038/s41598-024-69303-9